PixeLINK

CCD FireWire Cameras and software for high-performance Machine Vision applications.

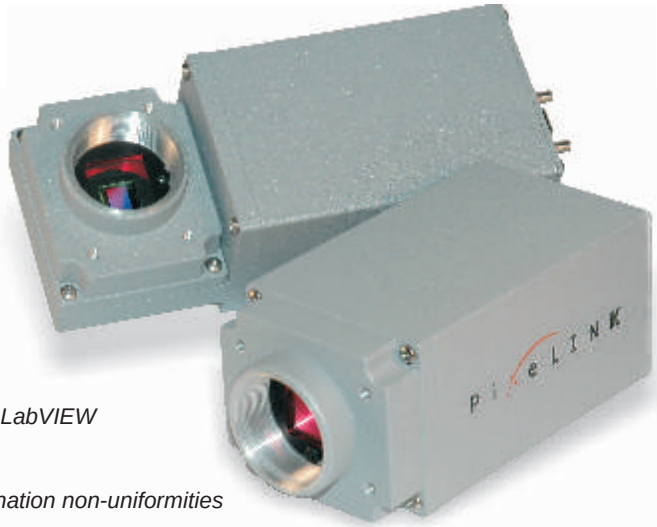

XGA - 2.0 Mega Pixel

- → *larger field of view, smaller defect detection and improved precision*

FireWire Interface

- → *deterministic communication for precisely timed applications*
- → *eliminates frame grabber and simplifies cabling*

Sony CCD Sensors

- → *low noise and low smear provide outstanding image quality*
- → *progressive scan read-out and high responsivity*

Common Software Developer's Kit (SDK)

- → *quick exchanges between FireWire, USB 2.0 and GigE cameras*
- → *includes sample source code and wrappers for National Instruments LabVIEW*

In-Camera Flat Field Correction

- → *enhances image quality through correction of FPN, PRNU and illumination non-uniformities*

PixeLINK Software Developer's Kit

Providing full control of all camera functions, the PixeLINK SDK contains a full Application Programming Interface, a sample application with source code, LabVIEW wrappers and documentation. The SDK is compatible with Visual Basic and Visual C++ on Windows™ 2000, XP and Vista (32-bit) platforms.

With the SDK, developers can integrate PixeLINK cameras into their custom applications with ease. A small set of API functions can be used to determine and control the camera feature set required for your application. Integration is fast and simple.

The SDK includes *PixeLINK Capture OEM*, a free sample application that controls all the camera functions and demonstrates camera performance. *PixeLINK Capture OEM* provides integrators with examples of how a PixeLINK camera can be integrated into a complex application. An API function call log displays the sequence of API calls used and their parameter values any time a control on the GUI is accessed.

PixeLINK Capture OEM also acts as a camera configuration utility and provides access to camera features that are not available with standard interfaces such as DirectShow or DCAM.

PixeLINK offers full technical support with the purchase of the SDK. The support includes access to our advanced support area on the PixeLINK website, free software upgrades as well as assistance from our experienced support team.

FireWire Digital Imaging Solutions for Machine Vision

PL-B900F series are high-performance megapixel color and monochrome cameras designed for machine vision and industrial inspection applications. The cameras are complemented by on-board look-up tables, multiple triggering modes, high speed electronic shuttering and low image lag. Real-time flat-field correction enhances image quality and corrects non-uniform illumination..

For OEM and end-users who require increased flexibility, PixeLINK offers all of its cameras with both standard and right-angle mechanical configurations.

Contact us or your PixeLINK Representative directly to determine which configuration best suits you application.

For more information, contact sales@pixelink.com

PixeLINK
3030 Conroy Road, Ottawa, ON Canada K1G 6C2
http://www.pixelink.com

Linden Bucks Technology Supplies Sdn. Bhd.
28A Jalan Mega Mendung, Bandar Park,
Off 5th Mile Jalan Kelang Lama
58200 Kuala Lumpur
MALAYSIA
Tel: +60-3-79832663 Fax: +60-3-79845137
Email: lbts@lindenbucks.com
www.lindenbucks.com

PixeLINK
www.pixelink.com

CCD FIREWIRE
MACHINE VISION CAMERAS

Camera Model >	PL-B952F / PL-B953F	PL-B954F / PL-B955F	PL-B954HF / PL-B955HF	PL-B956F / PL-B957F	PL-B958F / PL-B959F
Camera Specifications					
Color / Mono	Color / Mono	Color / Mono	Color / Mono	Color / Mono	Color / Mono
Resolution	1024 x 768	1392 x 1040	1392 x 1040	1392 x 1040	1600 x 1200
Frame Rate at Full Resolution	20	10	15	15	15
Sensor Type	ILT CCD	ILT CCD	ILT CCD	ILT CCD	ILT CCD
Shutter Speed	100µs	100µs	100µs	100µs	100µs
Lens Format	C 1/3”	C 1/2”	C 1/2”	C 2/3”	C 1/1.8”
Pixel Pitch	4.65µm	4.65µm	4.65µm	6.45µm	4.4µm
Sensor Diagonal	5.95mm	8.08mm	8.08mm	11.21mm	8.80mm
Bit Depth	8 or 12	8 or 12	8 or 12	8 or 12	8 or 12
Power Consumption (Watts)	3.8W	4.0W	4.8W	4.8W	5.3W
Right-angle Capable	All camera models are available with right angled case by adding suffix -R to part number				
Interface (FireWire)	2 x 6 PIN Connectors (with the option to daisy chain multiple cameras)				

Frame rates will vary based on host system variables and configuration

Camera Features via USB 2.0	
Trigger Options	Hardware - Optically Isolated 5-12V @ 4-11mA, Software and Free Running
General Purpose Outputs	2 Optically Isolated - Maximum 40V Differential, Maximum 15mA

Image Quality Measures	**(See the Knowledge Base at http://www.pixelink.com for a description of Image Quality Measurements)**				
Mono Responsivity (DN/(nJ/cm^2))	16.2 - 63.9	10.7 - 43.4	10.5 - 42.6	20.9 - 124.5	11.3 - 80.4
Color Responsivity (DN/(nJ/cm^2))	10.0 - 39.4	10.3 - 42.1	10.1 - 41.3	19.6 - 116.5	18.0 - 42.6
Dynamic Range	63dB	62.1dB	62.7dB	66.1dB	51.2dB
FPN	< 0.3%	< 0.3%	< 0.3%	< 0.2%	< 0.5%
PRNU	< 2.0%	< 2.5%	< 2.5%	< 2.0%	< 2.5%
Read Noise (12 bit)	2.9 DN	3.2 DN	3.0 DN	2.0 DN	11.3 DN

Software					
PixeLINK Capture OEM	Free Download at http://www.pixelink.com				
SDK (incl. LabView Wrappers)	Optional	Optional	Optional	Optional	Optional
DirectShow & TWAIN	Yes	Yes	Yes	Yes	Yes
Windows Compatible	Windows™ 2000, XP and Vista (32-bit)				

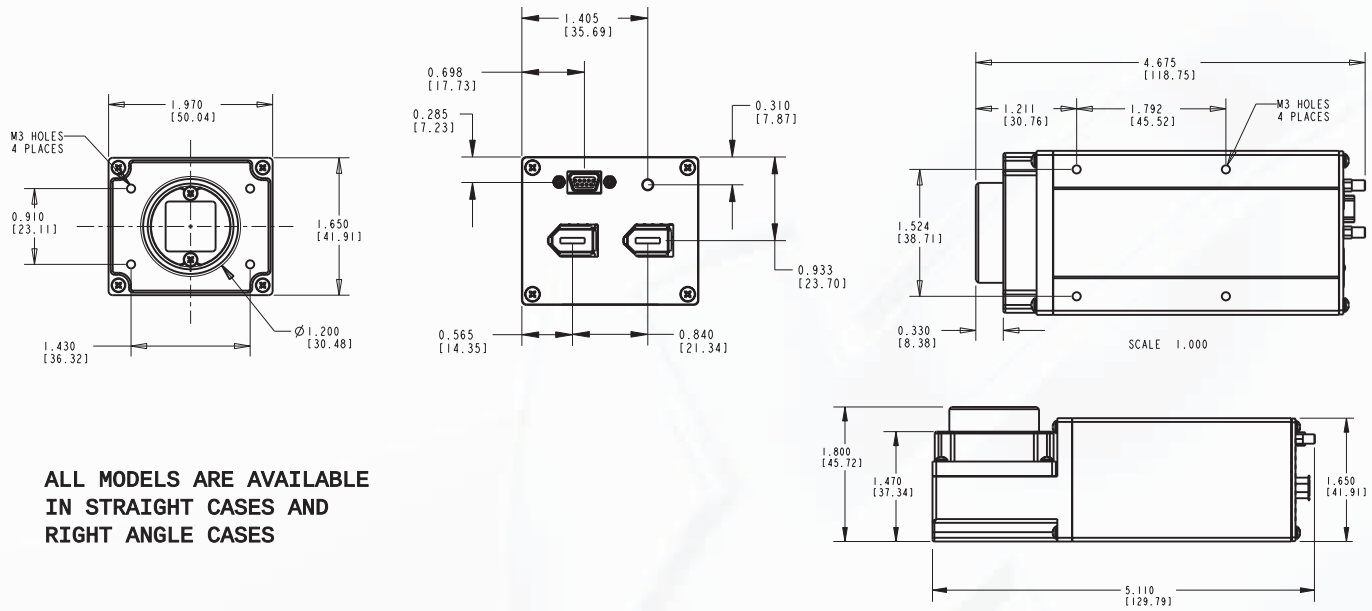

ALL MODELS ARE AVAILABLE IN STRAIGHT CASES AND RIGHT ANGLE CASES

Subject to change without notice

Copyright © 2007 PixeLINK. All rights reserved. PixeLINK is a trademark or registered trademark.
All other product names are trademarks or registered trademarks or their respective owners.